Finishes for Life
TARNISH-FREE GUARANTEED®

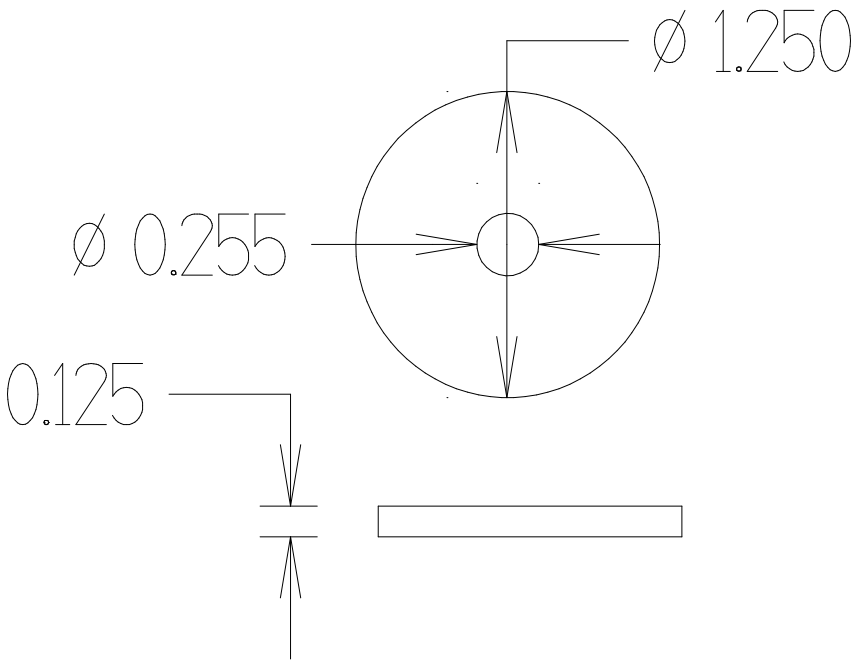

Colonial BRONZE CO.

PROUDLY MADE IN THE USA

CERTIFIED RECYCLED CONTENT™ SCS GLOBAL SERVICES
MINIMUM 94% RECYCLED CONTENT PRE-CONSUMER

Part Number: 9162 Rose